Back-Lit LED Panel Light
Installation Instruction

⚠ WARNING

- To reduce the risk of death, personal injury or property damage from fire, electric shock, falling parts, cuts/abrasions, and other hazards read all warnings and instructions included with and on the fixture box and all fixture labels.
- Before installing, servicing, or performing routine maintenance upon this equipment, follow these general precautions.
- Commercial installation, service and maintenance of luminaires should be performed by a qualified licensed electrician.
- For the installation: If you are unsure about the installation or maintenance of the luminaires, consult a qualified licensed electrician and check your local electrical code.
- To prevent wiring damage or abrasion, do not expose wiring to edges of sheet metal or other sharp objects.
- Do not make or alter any open holes in an enclosure of wiring or electrical components during kit installation.

⚠ WARNING

- Turn off electrical power at fuse or circuit breaker box before wiring fixture to the power supply.
- Turn off the power when you perform any maintenance.
- Verify that supply voltage is correct by comparing it with the luminaire label information.
- All wiring connections should be capped with UL approved wire connectors.

⚠ CAUTION

- Avoid direct eye exposure to the light source while it is on.
- Account for small parts and destroy packing material, as these may be hazardous to children.
- Risk of burn. Disconnect power and allow fixture to cool befor changing bulb or handing fixture.

NOTICE: Green ground screw provided in proper location.Do not relocate.
NOTICE: Minimum 90° supply conductors.
NOTICE: Specifications and dimensions subject to change without notice.
NOTICE: Suitable for Dry or Damp location, Type IC.

General Wiring Diagram

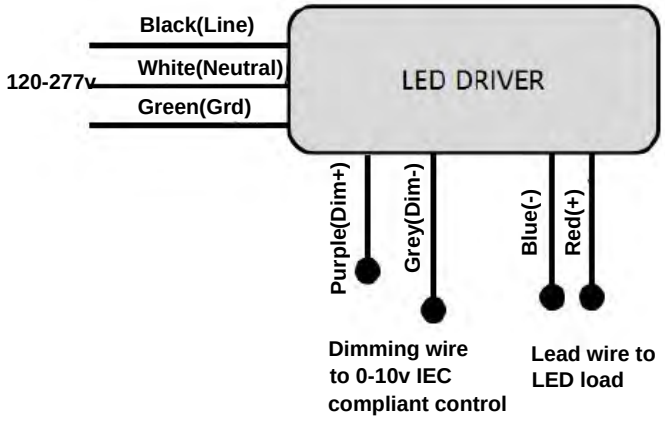

Back-Lit LED Panel Light
Installation Instruction

INSTRUCTIONS:

Always turn off the power supply from main circuit breaker first!

- Recessed Mounting

Figure 1

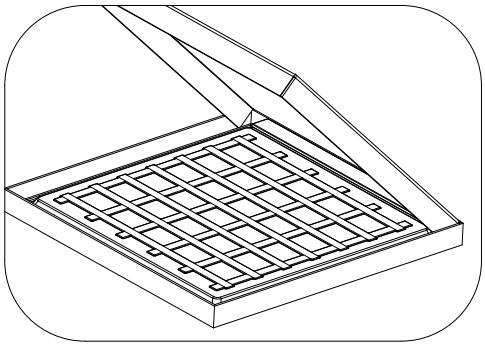

Carefully unpack unit and properly inspect for defects before installing. Wear work gloves to prevent dirt and oil from being transferred to the luminaire. If cleaning is needed, use gloves and a dry cottoncloth. It is not recommendedto use hazardous chemicals.

Figure 2

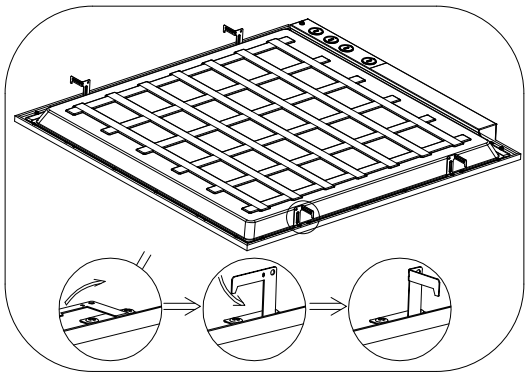

Lift up four mounting clips on the sides of the luminaire.You can do it by hand(Do wear work gloves) or use pliers

Figure 3

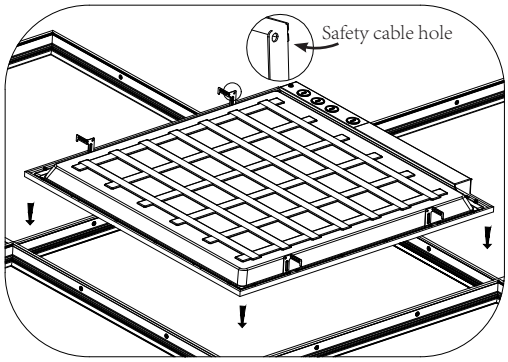

Insert luminaire into T-bar ceiling grid. Secure safety cable to connection hole as needed to meet local seismic requirements. Safety cable and method of attachment to the building provided by contractor according to local building codes.

Figure 4

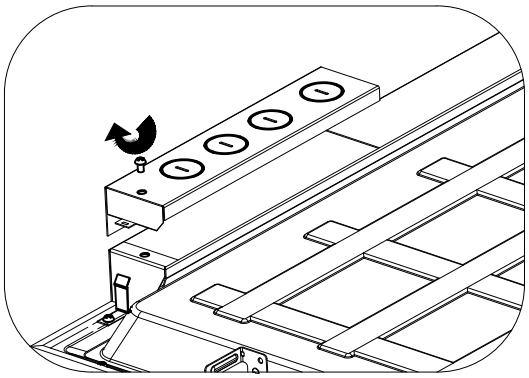

Remove electrical enclosure cover. Carefully remove knockout for AC line input wires and 0-10V control line. Install listed electrical fittings in the knockout holes for wire protection if needed.

Figure 5

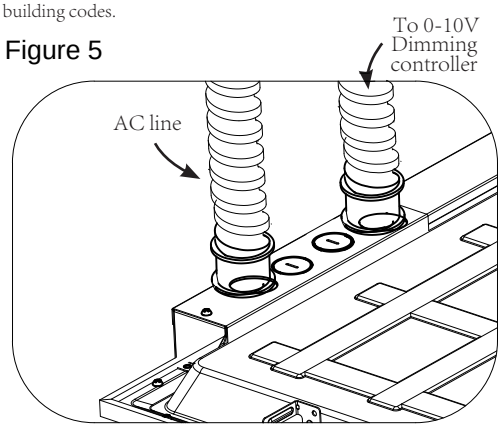

Plug in AC line(L and N,and GND) to the LED Driver using 18-14AWG Wire. When connecting 0-10Vdimming controller, wires must run through a separate knockout hole equipped with an appropriate electrical fitting.

Figure 6

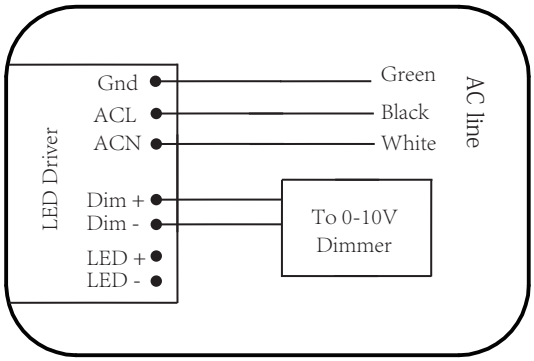

Follow wire connection instructions.When using the 0-10V dimming controller Run wires from controller through a different knockout than the AC input wire. Don't forget to return the electrical enclosure cover and tighten the screws.

Back-Lit LED Panel Light
Installation Instruction

- Cable Suspended Mounting

Figure 1

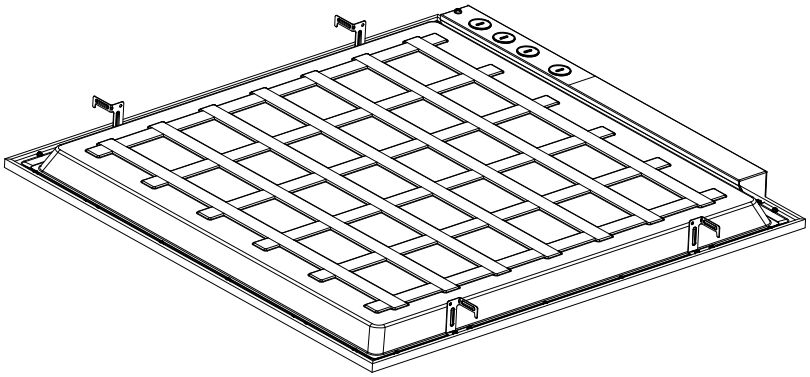

Figure 3

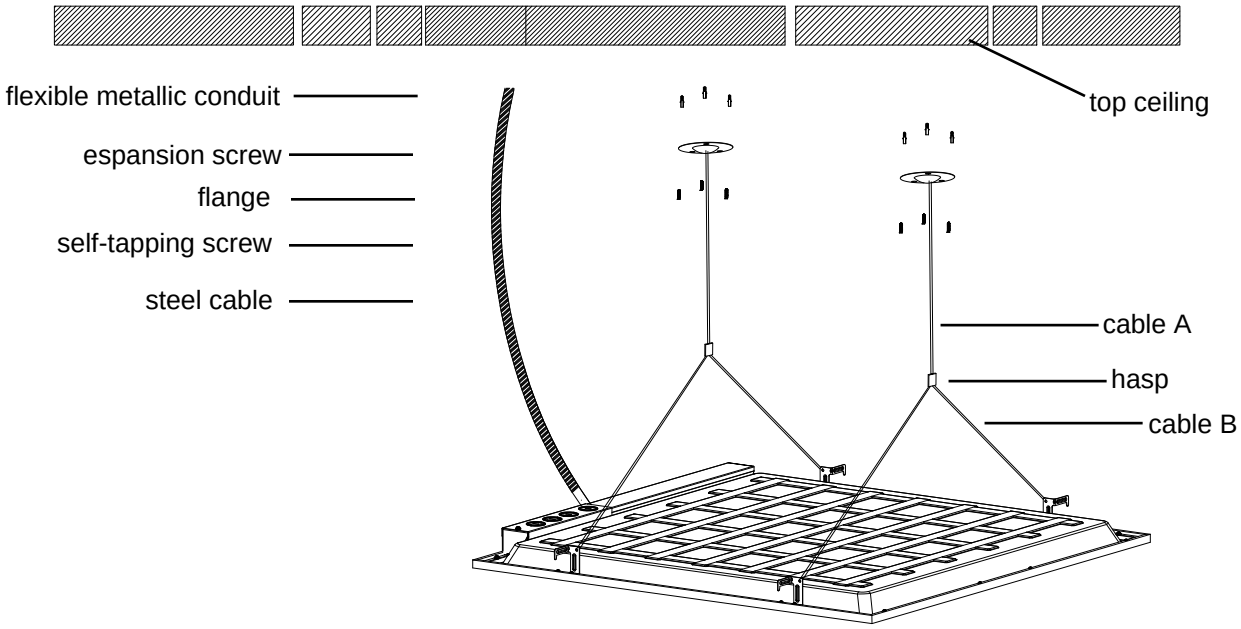

Installation Steps:

Step 1: Replace the exiting earth quake tabs with the provided brackets which are used for fixing adjustable cables.

Step 2: Pull the end cap of cable A through the provided flange and make sure the end cap positioned in the flange. Fix the flanges onto the ceiling by the seif-tapping screws.

Step 3: Insert the end of cable A into the hasp attached on the cable B.then adjust the cable A to be desired height and adjust the cable B to the desired angles.

Step 4: Hook the luminaire up to the hooks attached to the other end of cable B and make a final adjustments.

Step 5: Connect LED driver to AC mains power.

Back-Lit LED Panel Light
Installation Instruction

- Surface Mounting Kit

1.Using the appropriate dimensions and fasteners after properly measuring the placement of the surface mount frame. Choose the opening part as close as possible to the junction box prior to securing the surface mount frame to the ceiling . Ensure the frame is square ,then slide horizontally till the end of slots prior to fully securing the frame to the ceiling.

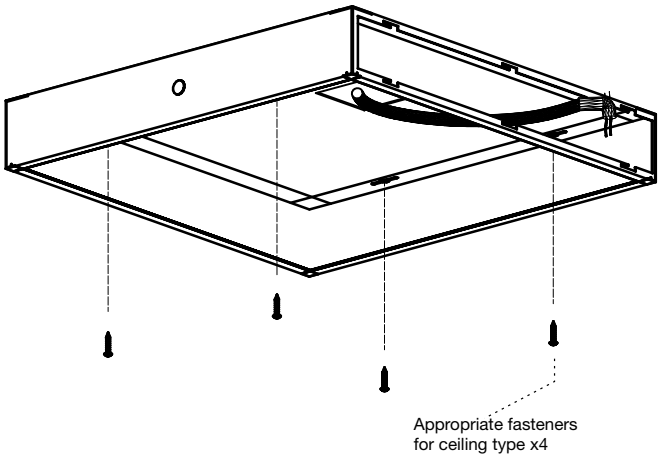

2.Put the wire conduit hose as close as possible to the surface mount opening before placing/inserting the luminaire into it partially.

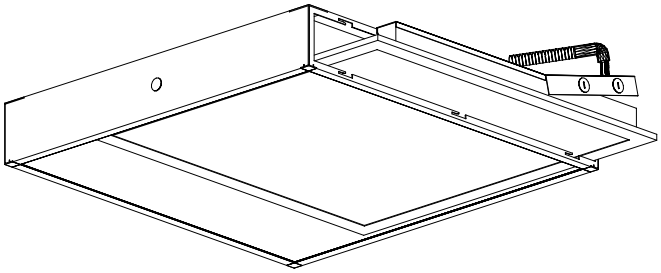

3.Make all electrical connections according to local code and make s ure wire conduit hose is long enough for wiring connection job .

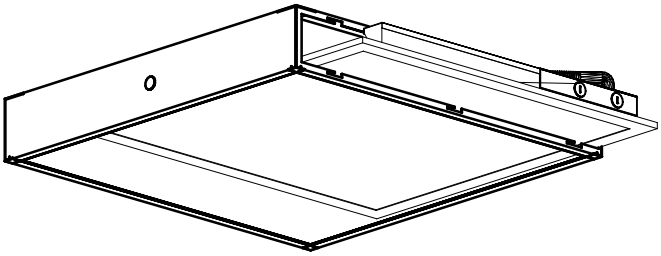

4.Push the conduit hose back into the surface mount frame properly ,insert the luminaire fully into the frame. When installed properly, the luminaire will rest on the flanges of the surface mount frames . If the luminaire is not resting properly on the flanges, lift it up and shift it until it rests into place.

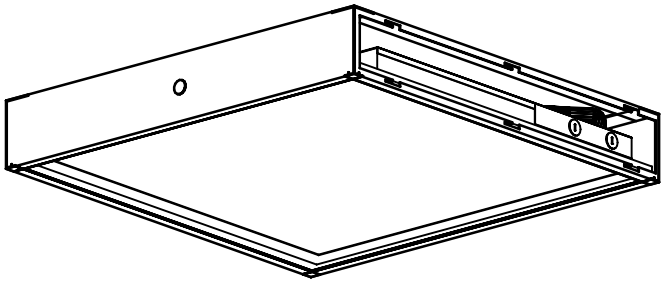

5. Place the last frame into the slots ,then slightly slide the last frame to the left , make sure it get locked tightly .

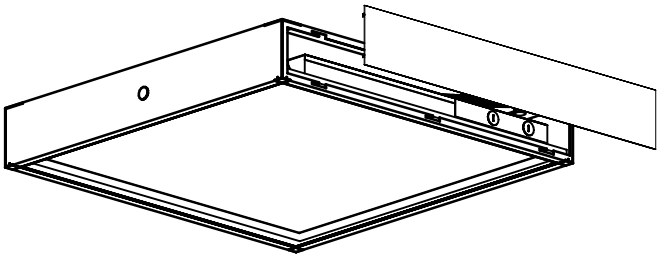

6.Installation completed. Fixture is ready to power on.

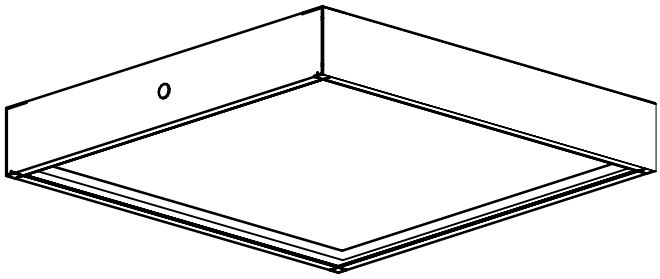

Back-Lit LED Panel Light
Installation Instruction

- Surface Mounting Kit

1.Using the appropriate dimensions and fasteners after properly measuring the placement of the surface mount frame.

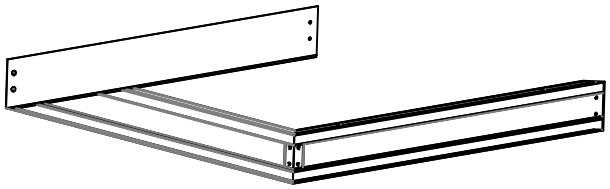

2.Choose the opening part as close as possible to the junction box prior to securing the surface mount frame to the ceiling . Enaure the frame is square,then slide horizontally till the end of slots prior to fully securing the frame to the ceiling.

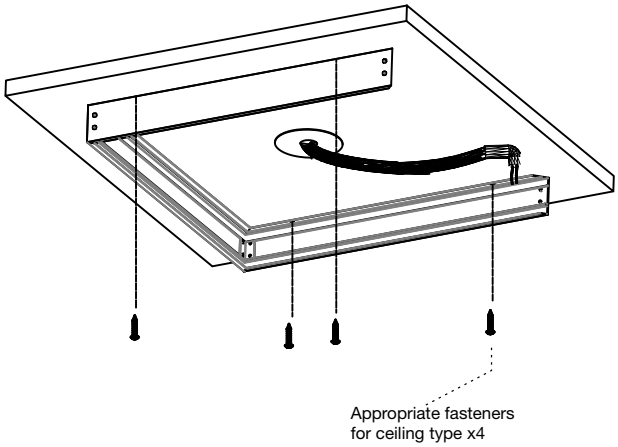

3.Put the wire conduit hose as close as possible to the surface mount opening before placing/inserting the luminaire into it partially.Make all electrical connections according to local code and make s ure wire conduit hose is long enough for wiring connection job .

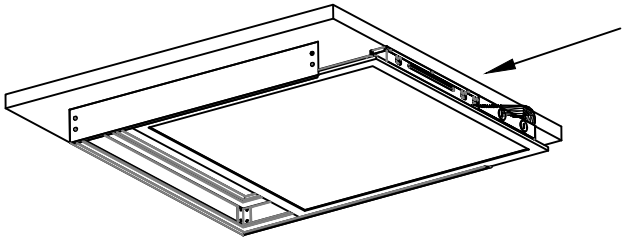

4.Push the conduit hose back into the surface mount frame properly ,insert the luminaire fully into the frame. When installed properly, the luminaire will rest on the flanges of the surface mount frames . If the luminaire is not resting properly on the flanges, lift it up and shift it until it rests into place.

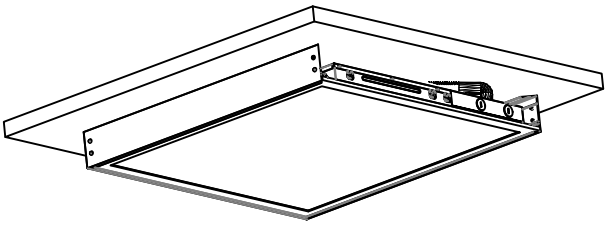

5. Place the last frame into the slots ,then slightly slide the last frame to the left , make sure it get locked tightly, join the last frame to the rested frames by fastening them together with appropriate fasteners .

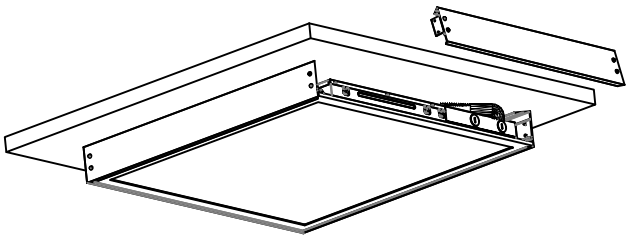

6.Installation completed. Fixture is ready to power on.

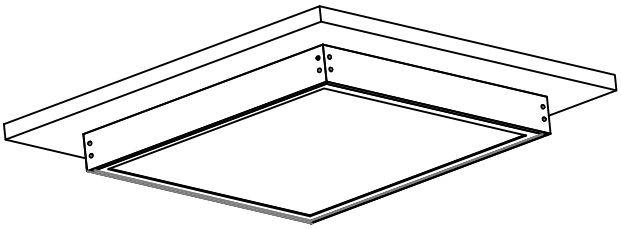

Back-Lit LED Panel Light
Installation Instruction

Field-Adjustable Wattage & CCT

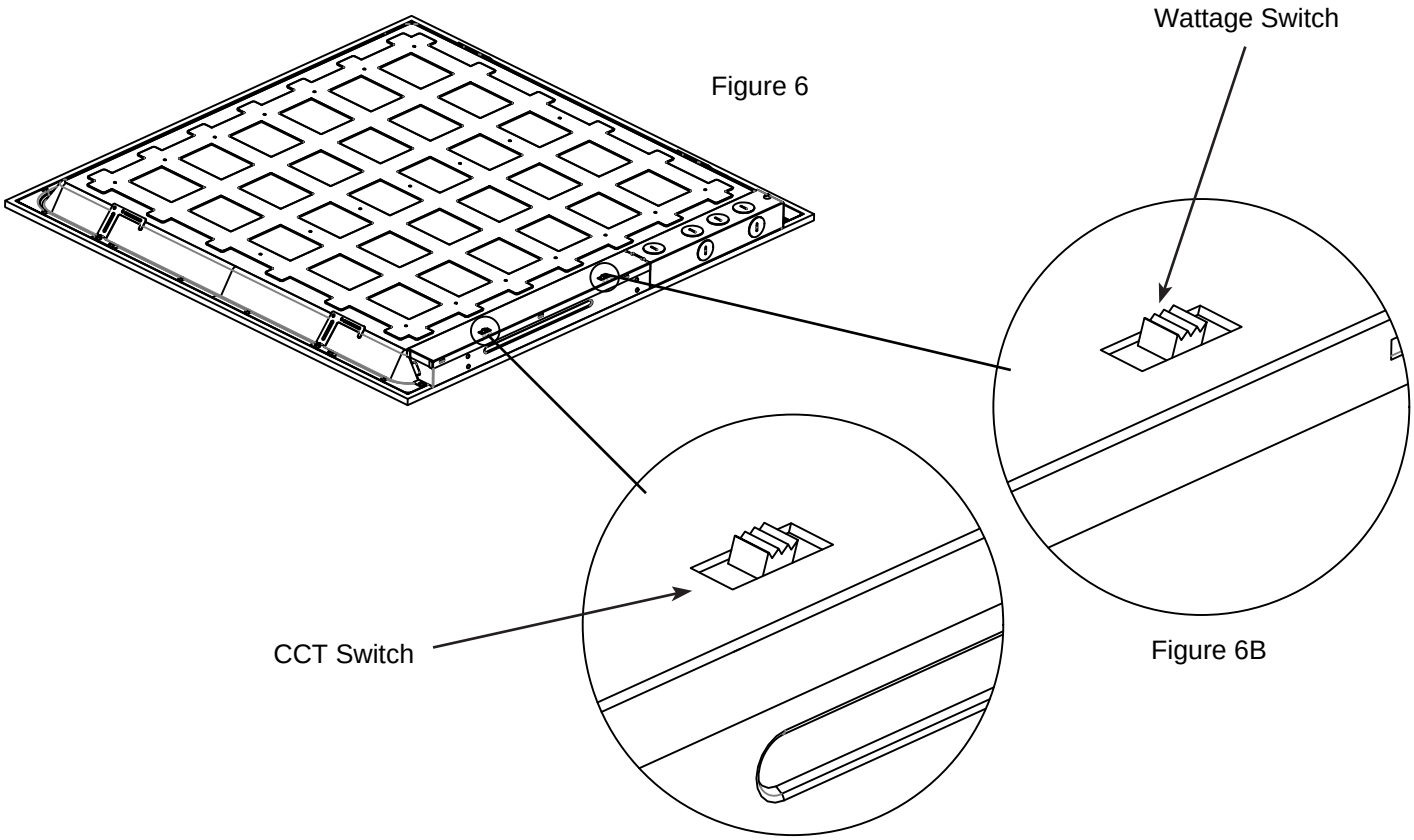

The end users may adjust the color temperature and lumen output respectively by the two DIP switch buttons integrated into the driver. Each DIP switch is accommodated with 3 options (left, middle and right),corresponding to 3 color temperatures and 3 powers respectively, which can perform the desired color temperature and lumen output combination.

Factory Settings: please see the product label on the fixture.

1.DIP switches are located onto the drive box.(see Fig.6)

2.Select a wattage and color temperature by sliding switch left or right respectively to the desired value.(see Fig.6A)

Back-Lit LED Panel Light
Installation Instruction

Additional Accessories

- Emergency Battery Back-up

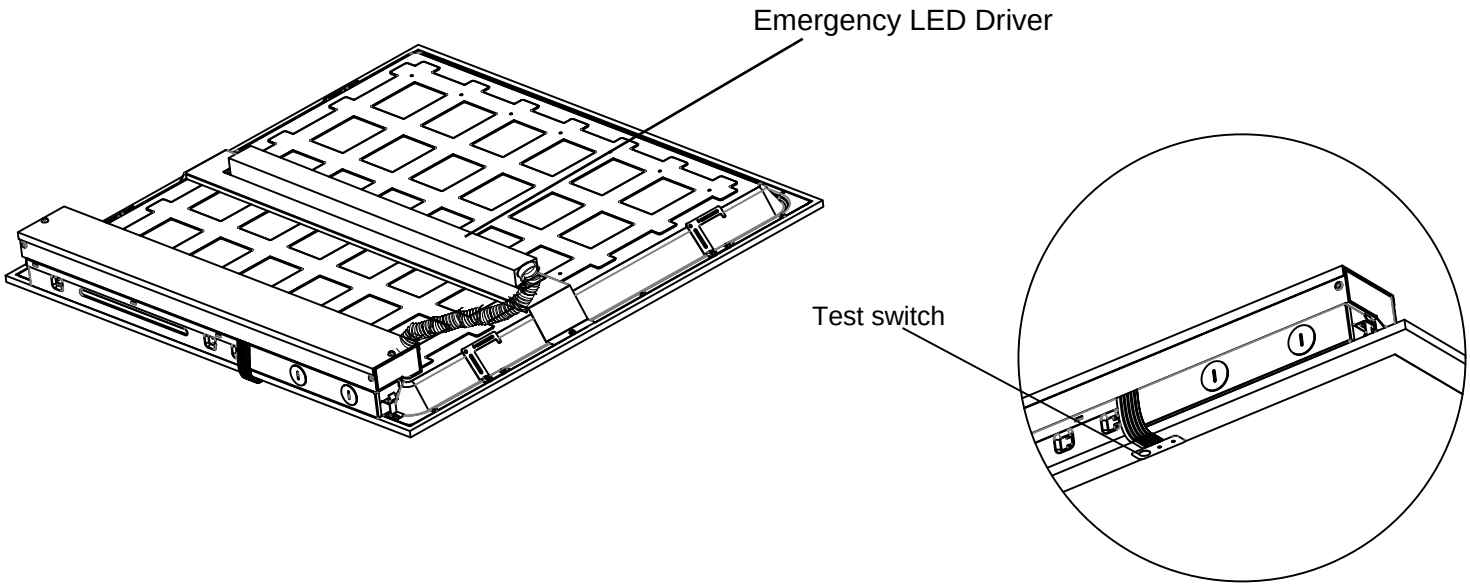
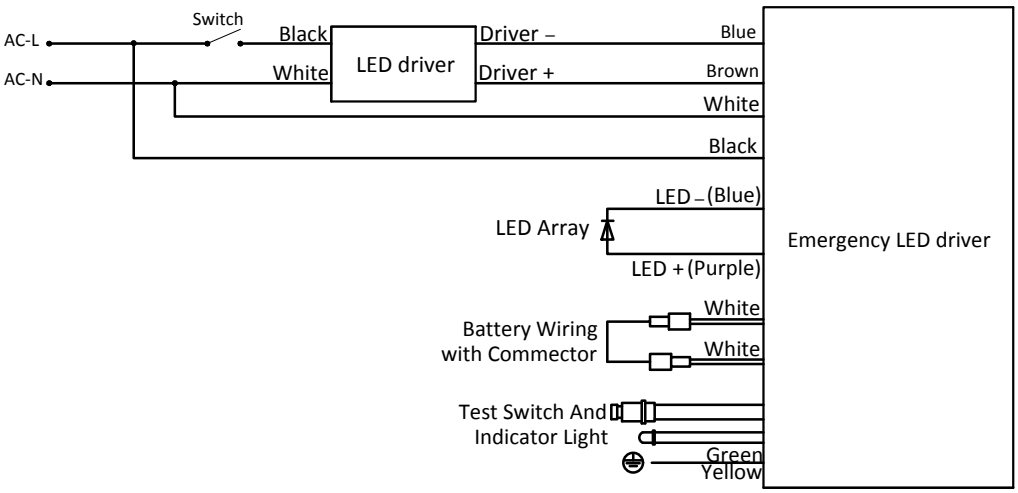
- Wiring Diagram